7.3 Types of section

7.3.1 Half section

Components that are symmetrical about a centre line may be drawn with one half in outside view and one half in section. When the sectioned half of the view contains an area of hatching that touches the centre line, the centre line should be changed to a continuous thin line (see figure 22). Hidden features should not be shown unless they are necessary for clarity.

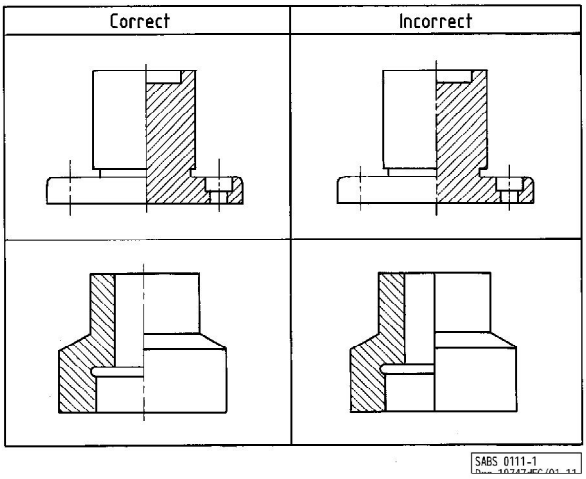

Figure 22

7.3.2 Part section

A view may be drawn in part section to show detail that would otherwise be hidden (see figure 23).

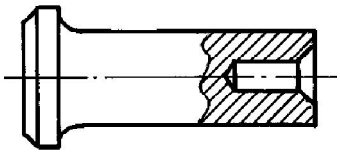

Figure 23

7.3.3 Revolved section

A revolved section (see figure 24) is used to show the shape of a cross-section on the view of the component by revolving the cutting plane in position. A revolved section is a section (see 7.1.1(a)), not a sectional view (see 7.1.1(b)).

The outline of a revolved section is drawn with a continuous thin line. If a revolved section cannot be shown or dimensioned clearly in position, a removed section should be used instead (see 7.3.4).

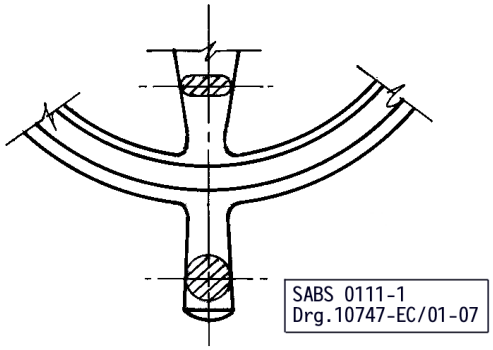

Figure 24

7.3.4 Removed section

A removed section is also used to show the shape of the cross-section of a component. It may be placed near the view and, if applicable, connected with the view by its line of symmetry (thin chain line) through the cutting plane, as shown in figure 25(a).

Alternatively, it may be shown, conventionally identified, either in projection or in any convenient place on the drawing (see figure 25(b)).

If a removed section is not symmetrical, one of the methods shown in figure 25(b) should be used. In all cases, the outline of the section should be drawn with a continuous thick line.

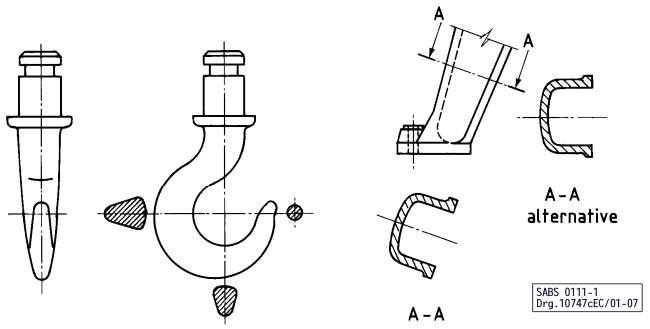

(a) Connected with the view by its line of symmetry

(b) Conventional representation

Figure 25

7.3.5 Sections of thin components

Sections of components that are too thin for hatching may be blackened (i.e. filled in solid), and a space left between adjacent components (see figure 26).

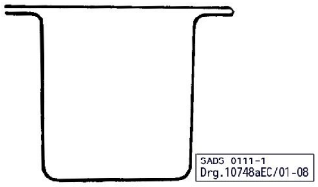

Figure 26

7.3.6 Successive sections

The method shown in figure 27(a) should be used to show successive sections, unless lack of space makes it necessary to adopt the arrangement shown in figure 27(b).

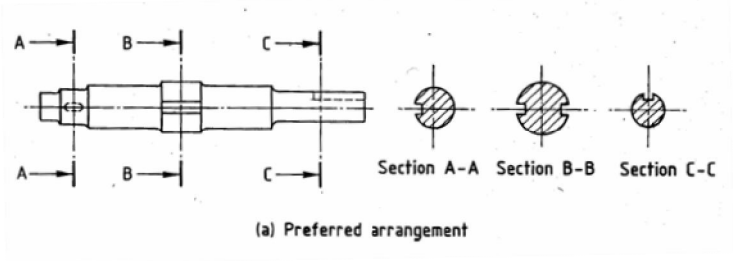

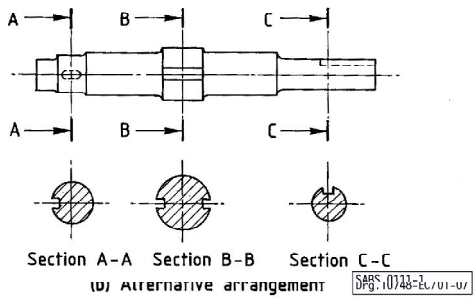

Figure 27

7.3.7 Exceptions

Ribs, shafts, bolts, nuts, rivets, rods, keys, pins and similar components should not be sectioned when the cutting plane passes longitudinally through them (see figure 28).

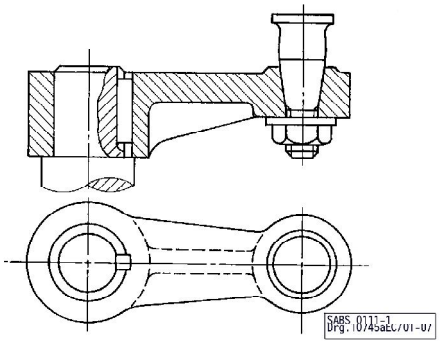

Figure 28

The following sections are not specified in the SANS 10111-1

Multi-plane section

The part shown in Figure 1 below has important features at three separate postions in the top view. The cutting plane is offset twice, once to pass through the hole and again to pass through the counterbored hole near the back of the part.

Observe that no line is shown at the offset in the cutting-plane in the sectional view (Figure 1a). When changes in viewing direction are not obvious, you can place reference letters at each turning point of the cutting plane. See also figure 2 a, b and c where the object is sectioned in three planes.

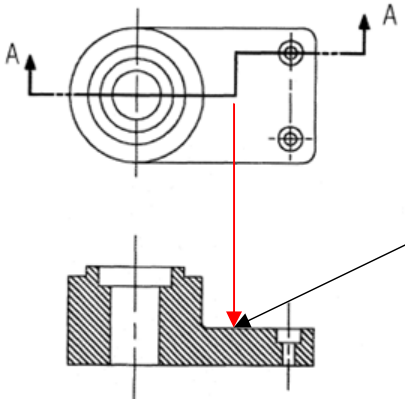

Figure 1

Figure 1a

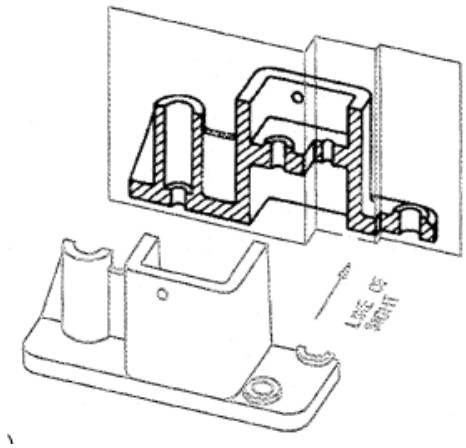

Figure 2a

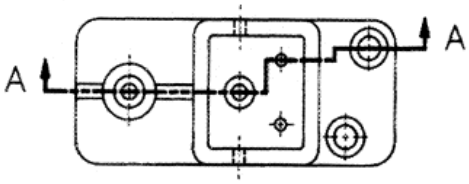

Figure 2b

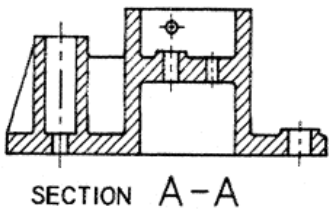

Figure 2c

Aligned sections.

In aligned sections, features of a symmetrical part that would be foreshortened - in a strict interpretation - are rotated into the plane of the paper. This preserves the feeling of symmetry, is easier to draw, and is more easily interpreted by the machinist.

In Figure 3, the spokes of the wheel have been rotated to project as true shape in the right side view. In Figure 3 the right side view is an aligned section. Both spokes and the keyseat are drawn as if they were cut by the cutting plane.

Another example of an aligned section is provided in figure 4. Figure 4 (a) shows the true front view projection of the part; Figure 4(b) shows the rib as rotated. It is now easier to complete a full section of the part.

Compare the two views for clarity and simplicity: Figure 4(a) is less clear and more complex projection than Figure 4(b).

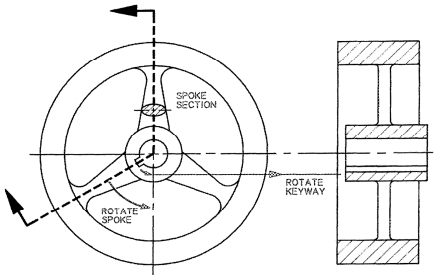

Figure 3

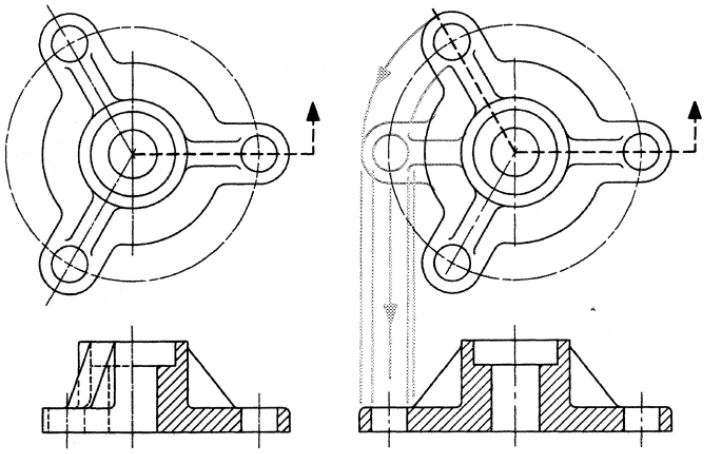

(a) Half section with true front projection of the part

(b) Full section with aligned (rotated) frontal projection

Figure 4